Port mapping example 5 illustration

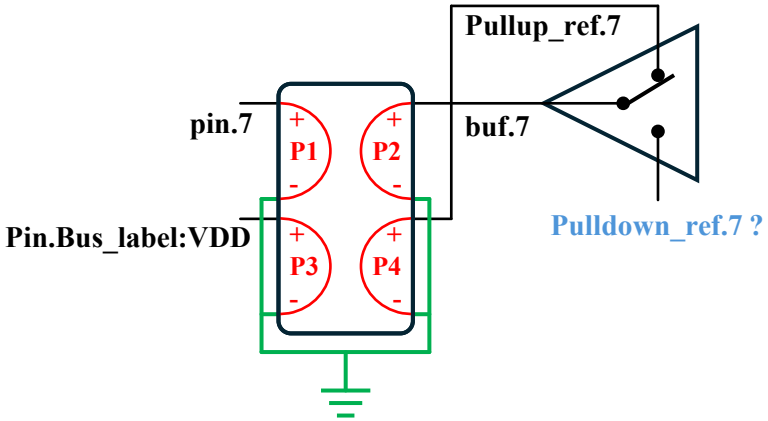

According to the current Port Mapping proposal

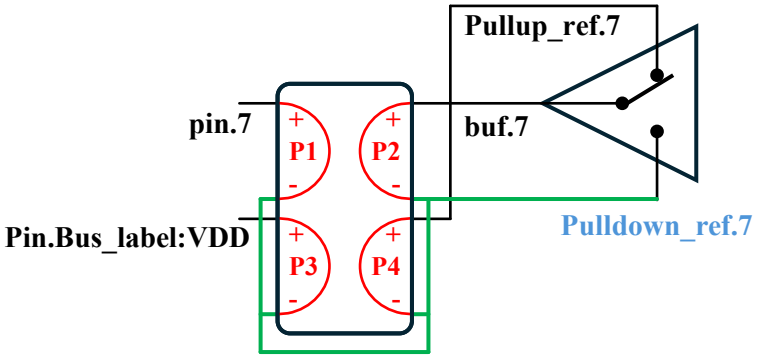

[Interconnect Model] N+1 referencing option that doesn't leave the buffer dangling

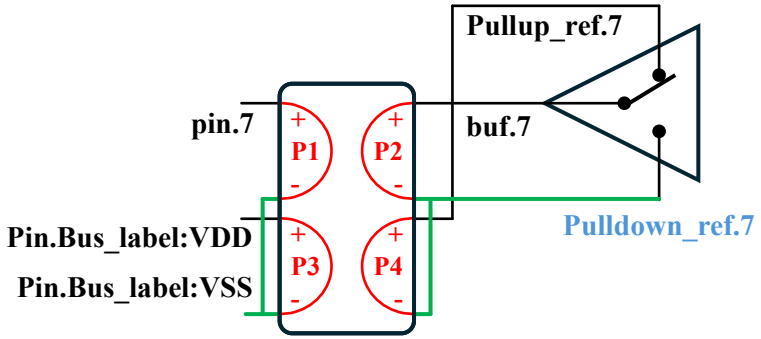

The only correct way: "per interface" referencing

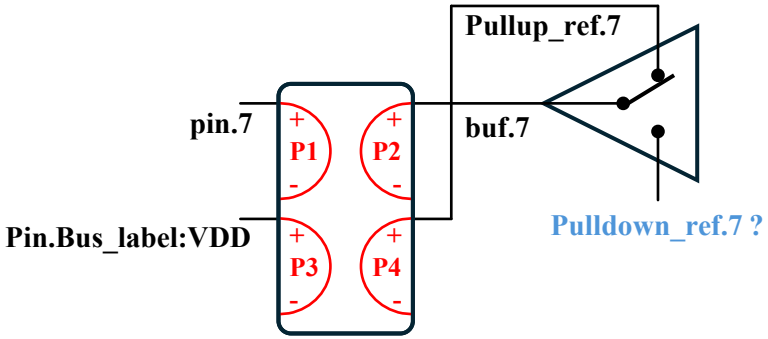

Removing the A_gnd rule for unspecified reference terminals (March 4, 2026 discussion)

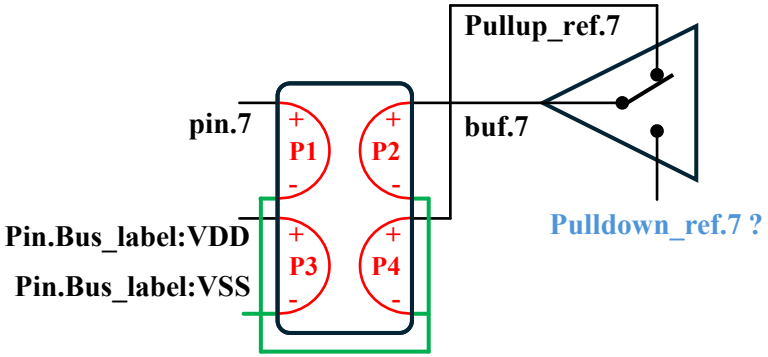

[Interconnect Model] N+1 referencing option that leaves the buffer dangling